DRILLING

드릴링 공구 카탈로그

2026 PRODUCT CATALOG





CMS 티드릴 시리즈

인덱서블 드릴 · 2D / 3D / 4D / 5D

직경 12.5–50 mm · 적용 인서트 SPMG · p.01–10

TWCD 크라운 드릴 시리즈

팁 교환식 드릴 · 1.5D ~ 8D

직경 10.0–30.8 mm · 드릴 팁 AABZ / AAZ / ACB · p.11–18

CMS

티드릴 시리즈

INDEXABLE DRILLS

색다른 티드릴



가공 깊이	직경 범위	적용 인서트
2D / 3D / 4D / 5D	12.5-50 mm	SPMG

인덱서블 드릴



시리즈 제품 예시 (3D)

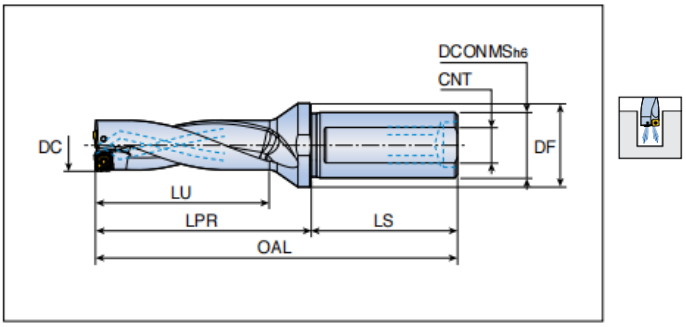

드릴링 깊이: 2 × 직경

DC 12.5-31 mm / 38개 모델

형번	DC	LU	LPR	LS	OAL	DF	DCONMS	CNT	인서트	스크루	렌치
CMS-2D125-20-05	12.5	30	46	50	96	25	20	-	SPMG05	M2.0*5	T6
CMS-2D130-20-05	13	31	47	50	97						
CMS-2D135-20-05	13.5	32	48	50	98						
CMS-2D140-25-05	14	33	53	53	106						
CMS-2D145-25-05	14.5	34	54	53	107						
CMS-2D150-25-05	15	35	55	53	108						
CMS-2D155-25-06	15.5	36	56	53	109	31	25	M16*1.5	SPMG06	M2.2*5	T7
CMS-2D160-25-06	16	37	57	53	110						
CMS-2D165-25-06	16.5	38	58	53	111						
CMS-2D170-25-06	17	39	59	53	112						
CMS-2D175-25-06	17.5	40	60	53	113						
CMS-2D180-25-06	18	41	61	53	114						
CMS-2D185-25-06	18.5	42	62	53	115						
CMS-2D190-25-06	19	43	63	53	116						
CMS-2D195-25-06	19.5	44	64	53	117						
CMS-2D200-25-06	20	45	65	53	118						
CMS-2D205-25-06	20.5	46	66	53	119						
CMS-2D210-25-06	21	47	67	53	120						
CMS-2D215-25-06	21.5	48	68	53	121						
CMS-2D220-25-07	22	49	69	53	122				SPMG07	M2.5*6	T8
CMS-2D225-25-07	22.5	50	70	53	123						
CMS-2D230-25-07	23	51	71	53	124						
CMS-2D235-25-07	23.5	52	72	53	125						
CMS-2D240-25-07	24	53	73	53	126						
CMS-2D245-25-07	24.5	54	74	53	127						
CMS-2D250-25-07	25	55	75	53	128						
CMS-2D255-25-07	25.5	56	76	53	129						
CMS-2D260-32-07	26	57	80	57	137						
CMS-2D265-32-07	26.5	58	81	57	138						
CMS-2D270-32-07	27	59	82	57	139						
CMS-2D275-32-07	27.5	60	83	57	140						
CMS-2D280-32-09	28	61	84	57	141	39	32	M22*2.0	SPMG09	M3.5*8	T15
CMS-2D285-32-09	28.5	62	85	57	142						
CMS-2D290-32-09	29	63	86	57	143						
CMS-2D295-32-09	29.5	64	87	57	144						
CMS-2D300-32-09	30	65	88	57	145						
CMS-2D305-32-09	30.5	66	89	57	146						
CMS-2D310-32-09	31	67	90	57	147						

단위: mm OAL = LPR + LS DCONMS: 샹크 직경 CNT: - 는 나사산 없음

CMS-2D 사양 1/2 다음 페이지: DC 31.5-50 mm

인덱서블 드릴



시리즈 제품 예시 (3D)

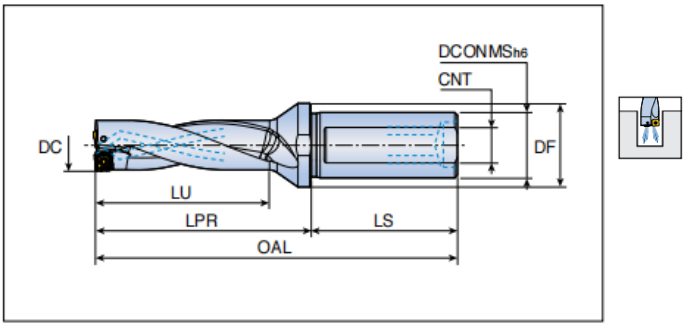

드릴링 깊이: 2 × 직경

DC 31.5-50 mm / 38개 모델

형번	DC	LU	LPR	LS	OAL	DF	DCONMS	CNT	인서트	스크루	렌치
CMS-2D315-32-09	31.5	68	91	57	148						
CMS-2D320-32-09	32	69	92	57	149						
CMS-2D325-32-09	32.5	70	93	57	150				SPMG09	M3.5*8	
CMS-2D330-32-09	33	71	94	57	151						
CMS-2D335-32-09	33.5	72	95	57	152	39					
CMS-2D340-32-11	34	73	96	57	153						
CMS-2D345-32-11	34.5	74	97	57	154						
CMS-2D350-32-11	35	75	98	57	155						
CMS-2D355-32-11	35.5	76	99	57	156		32	M22*2.0			
CMS-2D360-32-11	36	77	100	57	157						
CMS-2D365-32-11	36.5	78	101	57	158						T15
CMS-2D370-32-11	37	79	102	57	159						
CMS-2D375-32-11	37.5	80	103	57	160						
CMS-2D380-32-11	38	81	104	57	161	44			SPMG11	M4.0*10	
CMS-2D385-32-11	38.5	82	105	57	162						
CMS-2D390-32-11	39	83	106	57	163						
CMS-2D395-32-11	39.5	84	107	57	164						
CMS-2D400-40-11	40	85	108	62	170						
CMS-2D405-40-11	40.5	86	109	62	171						
CMS-2D410-40-11	41	87	110	62	172						
CMS-2D415-40-11	41.5	88	111	62	173						
CMS-2D420-40-14	42	89	112	62	174						
CMS-2D425-40-14	42.5	90	113	62	175						
CMS-2D430-40-14	43	91	114	62	176	49					
CMS-2D435-40-14	43.5	92	115	62	177						
CMS-2D440-40-14	44	93	116	62	178						
CMS-2D445-40-14	44.5	94	117	62	179						
CMS-2D450-40-14	45	95	118	62	180		40	-			
CMS-2D455-40-14	45.5	96	119	62	181						
CMS-2D460-40-14	46	97	120	62	182				SPMG14	M5.0*12	T20
CMS-2D465-40-14	46.5	98	121	62	183						
CMS-2D470-40-14	47	99	122	62	184						
CMS-2D475-40-14	47.5	100	123	62	185						
CMS-2D480-40-14	48	101	124	62	186	54					
CMS-2D485-40-14	48.5	102	125	62	187						
CMS-2D490-40-14	49	103	126	62	188						
CMS-2D495-40-14	49.5	104	127	62	189						
CMS-2D500-40-14	50	105	128	62	190						

단위: mm OAL = LPR + LS DCONMS: 샹크 직경 CNT: - 는 나사산 없음

CMS-2D 사양 2/2 DC 31.5-50 mm

인덱서블 드릴



시리즈 제품 예시 (3D)

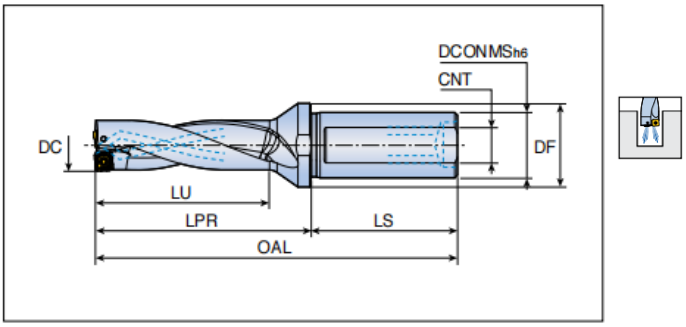

드릴링 깊이: 3 × 직경

DC 12.5-31 mm / 38개 모델

형번	DC	LU	LPR	LS	OAL	DF	DCONMS	CNT	인서트	스크루	렌치
CMS-3D125-20-05	12.5	42.5	58.5	50	108.5	25	20	-	SPMG05	M2.0*5	T6
CMS-3D130-20-05	13	44	60	50	110						
CMS-3D135-20-05	13.5	45.5	61.5	50	111.5						
CMS-3D140-25-05	14	47	67	53	120						
CMS-3D145-25-05	14.5	48.5	68.5	53	121.5						
CMS-3D150-25-05	15	50	70	53	123						
CMS-3D155-25-06	15.5	51.5	71.5	53	124.5	31	25	M16*1.5	SPMG06	M2.2*5	T7
CMS-3D160-25-06	16	53	73	53	126						
CMS-3D165-25-06	16.5	54.5	74.5	53	127.5						
CMS-3D170-25-06	17	56	76	53	129						
CMS-3D175-25-06	17.5	57.5	77.5	53	130.5						
CMS-3D180-25-06	18	59	79	53	132						
CMS-3D185-25-06	18.5	60.5	80.5	53	133.5						
CMS-3D190-25-06	19	62	82	53	135						
CMS-3D195-25-06	19.5	63.5	83.5	53	136.5						
CMS-3D200-25-06	20	65	85	53	138						
CMS-3D205-25-06	20.5	66.5	86.5	53	139.5						
CMS-3D210-25-06	21	68	88	53	141						
CMS-3D215-25-06	21.5	69.5	89.5	53	142.5						
CMS-3D220-25-07	22	71	91	53	144				SPMG07	M2.5*6	T8
CMS-3D225-25-07	22.5	72.5	92.5	53	145.5						
CMS-3D230-25-07	23	74	94	53	147						
CMS-3D235-25-07	23.5	75.5	95.5	53	148.5						
CMS-3D240-25-07	24	77	97	53	150						
CMS-3D245-25-07	24.5	78.5	98.5	53	151.5						
CMS-3D250-25-07	25	80	100	53	153						
CMS-3D255-25-07	25.5	81.5	101.5	53	154.5						
CMS-3D260-32-07	26	83	106	57	163						
CMS-3D265-32-07	26.5	84.5	107.5	57	164.5						
CMS-3D270-32-07	27	86	109	57	166						
CMS-3D275-32-07	27.5	87.5	110.5	57	167.5						
CMS-3D280-32-09	28	89	112	57	169	39	32	M22*2.0	SPMG09	M3.5*8	T15
CMS-3D285-32-09	28.5	90.5	113.5	57	170.5						
CMS-3D290-32-09	29	92	115	57	172						
CMS-3D295-32-09	29.5	93.5	116.5	57	173.5						
CMS-3D300-32-09	30	95	118	57	175						
CMS-3D305-32-09	30.5	96.5	119.5	57	176.5						
CMS-3D310-32-09	31	98	121	57	178						

단위: mm OAL = LPR + LS DCONMS: 샹크 직경 CNT: - 는 나사산 없음

CMS-3D 사양 1/2 다음 페이지: DC 31.5-50 mm

인덱서블 드릴



시리즈 제품 예시 (3D)

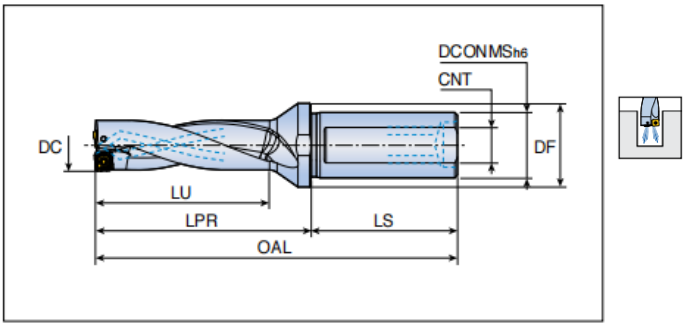

드릴링 깊이: 3 × 직경

DC 31.5-50 mm / 38개 모델

형번	DC	LU	LPR	LS	OAL	DF	DCONMS	CNT	인서트	스크루	렌치
CMS-3D315-32-09	31.5	99.5	122.5	57	179.5						
CMS-3D320-32-09	32	101	124	57	181						
CMS-3D325-32-09	32.5	102.5	125.5	57	182.5				SPMG09	M3.5*8	
CMS-3D330-32-09	33	104	127	57	184						
CMS-3D335-32-09	33.5	105.5	128.5	57	185.5	39					
CMS-3D340-32-11	34	107	130	57	187						
CMS-3D345-32-11	34.5	108.5	131.5	57	188.5						
CMS-3D350-32-11	35	110	133	57	190						
CMS-3D355-32-11	35.5	111.5	134.5	57	191.5		32	M22*2.0			
CMS-3D360-32-11	36	113	136	57	193						
CMS-3D365-32-11	36.5	114.5	137.5	57	194.5						T15
CMS-3D370-32-11	37	116	139	57	196						
CMS-3D375-32-11	37.5	117.5	140.5	57	197.5						
CMS-3D380-32-11	38	119	142	57	199	44			SPMG11	M4.0*10	
CMS-3D385-32-11	38.5	120.5	143.5	57	200.5						
CMS-3D390-32-11	39	122	145	57	202						
CMS-3D395-32-11	39.5	123.5	146.5	57	203.5						
CMS-3D400-40-11	40	125	148	62	210						
CMS-3D405-40-11	40.5	126.5	149.5	62	211.5						
CMS-3D410-40-11	41	128	151	62	213						
CMS-3D415-40-11	41.5	129.5	152.5	62	214.5						
CMS-3D420-40-14	42	131	154	62	216						
CMS-3D425-40-14	42.5	132.5	155.5	62	217.5						
CMS-3D430-40-14	43	134	157	62	219	49					
CMS-3D435-40-14	43.5	135.5	158.5	62	220.5						
CMS-3D440-40-14	44	137	160	62	222						
CMS-3D445-40-14	44.5	138.5	161.5	62	223.5						
CMS-3D450-40-14	45	140	163	62	225		40	-			
CMS-3D455-40-14	45.5	141.5	164.5	62	226.5						
CMS-3D460-40-14	46	143	166	62	228				SPMG14	M5.0*12	T20
CMS-3D465-40-14	46.5	144.5	167.5	62	229.5						
CMS-3D470-40-14	47	146	169	62	231						
CMS-3D475-40-14	47.5	147.5	170.5	62	232.5						
CMS-3D480-40-14	48	149	172	62	234	54					
CMS-3D485-40-14	48.5	150.5	173.5	62	235.5						
CMS-3D490-40-14	49	152	175	62	237						
CMS-3D495-40-14	49.5	153.5	176.5	62	238.5						
CMS-3D500-40-14	50	155	178	62	240						

단위: mm OAL = LPR + LS DCONMS: 샹크 직경 CNT: - 는 나사산 없음

CMS-3D 사양 2/2 DC 31.5-50 mm

인덱서블 드릴



시리즈 제품 예시 (3D)

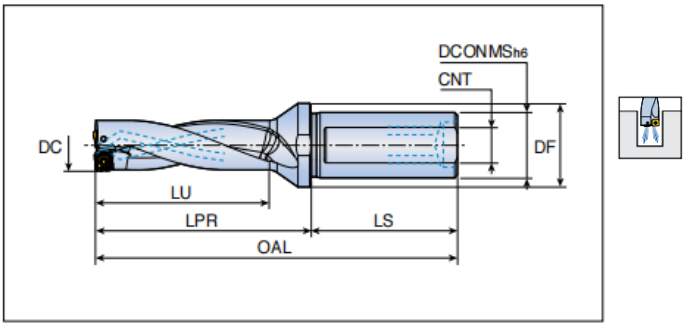

드릴링 깊이: 4 × 직경

DC 12.5-31 mm / 38개 모델

형번	DC	LU	LPR	LS	OAL	DF	DCONMS	CNT	인서트	스크루	렌치
CMS-4D125-20-05	12.5	55	71	50	121	25	20	-	SPMG05	M2.0*5	T6
CMS-4D130-20-05	13	57	73	50	123						
CMS-4D135-20-05	13.5	59	75	50	125						
CMS-4D140-25-05	14	61	81	53	134						
CMS-4D145-25-05	14.5	63	83	53	136						
CMS-4D150-25-05	15	65	85	53	138						
CMS-4D155-25-06	15.5	67	87	53	140	31	25	M16*1.5	SPMG06	M2.2*5	T7
CMS-4D160-25-06	16	69	89	53	142						
CMS-4D165-25-06	16.5	71	91	53	144						
CMS-4D170-25-06	17	73	93	53	146						
CMS-4D175-25-06	17.5	75	95	53	148						
CMS-4D180-25-06	18	77	97	53	150						
CMS-4D185-25-06	18.5	79	99	53	152						
CMS-4D190-25-06	19	81	101	53	154						
CMS-4D195-25-06	19.5	83	103	53	156						
CMS-4D200-25-06	20	85	105	53	158						
CMS-4D205-25-06	20.5	87	107	53	160						
CMS-4D210-25-06	21	89	109	53	162						
CMS-4D215-25-06	21.5	91	111	53	164						
CMS-4D220-25-07	22	93	113	53	166				SPMG07	M2.5*6	T8
CMS-4D225-25-07	22.5	95	115	53	168						
CMS-4D230-25-07	23	97	117	53	170						
CMS-4D235-25-07	23.5	99	119	53	172						
CMS-4D240-25-07	24	101	121	53	174						
CMS-4D245-25-07	24.5	103	123	53	176						
CMS-4D250-25-07	25	105	125	53	178						
CMS-4D255-25-07	25.5	107	127	53	180						
CMS-4D260-32-07	26	109	132	57	189						
CMS-4D265-32-07	26.5	111	134	57	191						
CMS-4D270-32-07	27	113	136	57	193						
CMS-4D275-32-07	27.5	115	138	57	195						
CMS-4D280-32-09	28	117	140	57	197	39	32	M22*2.0	SPMG09	M3.5*8	T15
CMS-4D285-32-09	28.5	119	142	57	199						
CMS-4D290-32-09	29	121	144	57	201						
CMS-4D295-32-09	29.5	123	146	57	203						
CMS-4D300-32-09	30	125	148	57	205						
CMS-4D305-32-09	30.5	127	150	57	207						
CMS-4D310-32-09	31	129	152	57	209						

단위: mm OAL = LPR + LS DCONMS: 샹크 직경 CNT: - 는 나사산 없음

CMS-4D 사양 1/2 다음 페이지: DC 31.5-50 mm

인덱서블 드릴



시리즈 제품 예시 (3D)

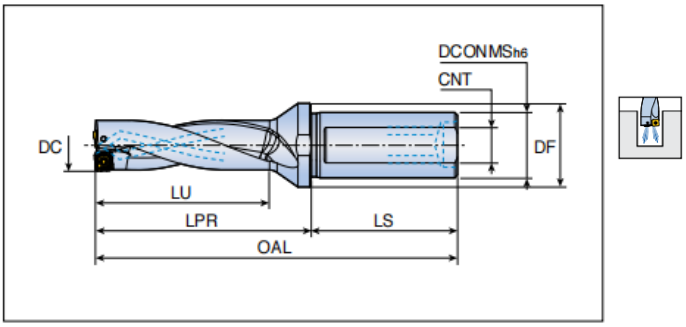

드릴링 깊이: 4 × 직경

DC 31.5-50 mm / 38개 모델

형번	DC	LU	LPR	LS	OAL	DF	DCONMS	CNT	인서트	스크루	렌치
CMS-4D315-32-09	31.5	131	154	57	211						
CMS-4D320-32-09	32	133	156	57	213						
CMS-4D325-32-09	32.5	135	158	57	215				SPMG09	M3.5*8	
CMS-4D330-32-09	33	137	160	57	217						
CMS-4D335-32-09	33.5	139	162	57	219	39					
CMS-4D340-32-11	34	141	164	57	221						
CMS-4D345-32-11	34.5	143	166	57	223						
CMS-4D350-32-11	35	145	168	57	225						
CMS-4D355-32-11	35.5	147	170	57	227		32	M22*2.0			
CMS-4D360-32-11	36	149	172	57	229						
CMS-4D365-32-11	36.5	151	174	57	231						T15
CMS-4D370-32-11	37	153	176	57	233						
CMS-4D375-32-11	37.5	155	178	57	235						
CMS-4D380-32-11	38	157	180	57	237	44			SPMG11	M4.0*10	
CMS-4D385-32-11	38.5	159	182	57	239						
CMS-4D390-32-11	39	161	184	57	241						
CMS-4D395-32-11	39.5	163	186	57	243						
CMS-4D400-40-11	40	165	188	62	250						
CMS-4D405-40-11	40.5	167	190	62	252						
CMS-4D410-40-11	41	169	192	62	254						
CMS-4D415-40-11	41.5	171	194	62	256						
CMS-4D420-40-14	42	173	196	62	258						
CMS-4D425-40-14	42.5	175	198	62	260						
CMS-4D430-40-14	43	177	200	62	262	49					
CMS-4D435-40-14	43.5	179	202	62	264						
CMS-4D440-40-14	44	181	204	62	266						
CMS-4D445-40-14	44.5	183	206	62	268						
CMS-4D450-40-14	45	185	208	62	270		40	-			
CMS-4D455-40-14	45.5	187	210	62	272						
CMS-4D460-40-14	46	189	212	62	274				SPMG14	M5.0*12	T20
CMS-4D465-40-14	46.5	191	214	62	276						
CMS-4D470-40-14	47	193	216	62	278						
CMS-4D475-40-14	47.5	195	218	62	280						
CMS-4D480-40-14	48	197	220	62	282	54					
CMS-4D485-40-14	48.5	199	222	62	284						
CMS-4D490-40-14	49	201	224	62	286						
CMS-4D495-40-14	49.5	203	226	62	288						
CMS-4D500-40-14	50	205	228	62	290						

단위: mm OAL = LPR + LS DCONMS: 샹크 직경 CNT: - 는 나사산 없음

CMS-4D 사양 2/2 DC 31.5-50 mm

CMS-5D CMS 시리즈 5D

인덱서블 드릴



시리즈 제품 예시 (3D)

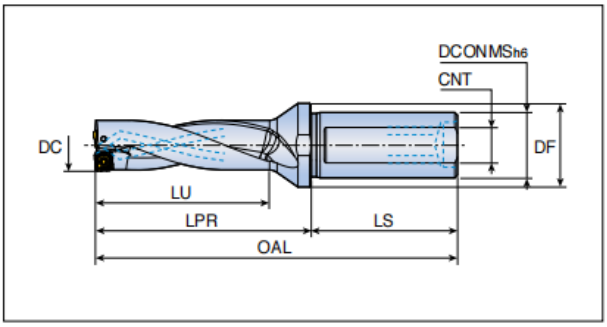

드릴링 깊이: 5 × 직경

DC 12.5-31 mm / 38개 모델

형번	DC	LU	LPR	LS	OAL	DF	DCONMS	CNT	인서트	스크루	렌치
CMS-5D125-20-05	12.5	67.5	83.5	50	133.5	25	20	-	SPMG05	M2.0*5	T6
CMS-5D130-20-05	13	70	86	50	136						
CMS-5D135-20-05	13.5	72.5	88.5	50	138.5						
CMS-5D140-25-05	14	75	95	53	148						
CMS-5D145-25-05	14.5	77.5	97.5	53	150.5						
CMS-5D150-25-05	15	80	100	53	153						
CMS-5D155-25-06	15.5	82.5	102.5	53	155.5	31	25	M16*1.5	SPMG06	M2.2*5	T7
CMS-5D160-25-06	16	85	105	53	158						
CMS-5D165-25-06	16.5	87.5	107.5	53	160.5						
CMS-5D170-25-06	17	90	110	53	163						
CMS-5D175-25-06	17.5	92.5	112.5	53	165.5						
CMS-5D180-25-06	18	95	115	53	168						
CMS-5D185-25-06	18.5	97.5	117.5	53	170.5						
CMS-5D190-25-06	19	100	120	53	173						
CMS-5D195-25-06	19.5	102.5	122.5	53	175.5						
CMS-5D200-25-06	20	105	125	53	178						
CMS-5D205-25-06	20.5	107.5	127.5	53	180.5						
CMS-5D210-25-06	21	110	130	53	183						
CMS-5D215-25-06	21.5	112.5	132.5	53	185.5						
CMS-5D220-25-07	22	115	135	53	188				SPMG07	M2.5*6	T8
CMS-5D225-25-07	22.5	117.5	137.5	53	190.5						
CMS-5D230-25-07	23	120	140	53	193						
CMS-5D235-25-07	23.5	122.5	142.5	53	195.5						
CMS-5D240-25-07	24	125	145	53	198						
CMS-5D245-25-07	24.5	127.5	147.5	53	200.5						
CMS-5D250-25-07	25	130	150	53	203						
CMS-5D255-25-07	25.5	132.5	152.5	53	205.5						
CMS-5D260-32-07	26	135	158	57	215						
CMS-5D265-32-07	26.5	137.5	160.5	57	217.5						
CMS-5D270-32-07	27	140	163	57	220						
CMS-5D275-32-07	27.5	142.5	165.5	57	222.5						
CMS-5D280-32-09	28	145	168	57	225	39	32	M22*2.0	SPMG09	M3.5*8	T15
CMS-5D285-32-09	28.5	147.5	170.5	57	227.5						
CMS-5D290-32-09	29	150	173	57	230						
CMS-5D295-32-09	29.5	152.5	175.5	57	232.5						
CMS-5D300-32-09	30	155	178	57	235						
CMS-5D305-32-09	30.5	157.5	180.5	57	237.5						
CMS-5D310-32-09	31	160	183	57	240						

단위: mm OAL = LPR + LS DCONMS: 샹크 직경 CNT: - 는 나사산 없음

CMS-5D 사양 1/2 다음 페이지: DC 31.5-50 mm

인덱서블 드릴



시리즈 제품 예시 (3D)

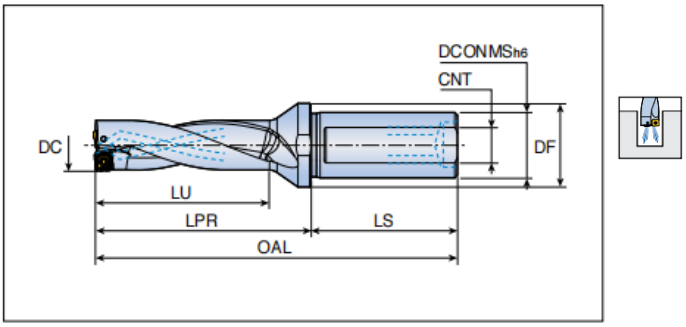

드릴링 깊이: 5 × 직경

DC 31.5-50 mm / 38개 모델

형번	DC	LU	LPR	LS	OAL	DF	DCONMS	CNT	인서트	스크루	렌치
CMS-5D315-32-09	31.5	162.5	185.5	57	242.5						
CMS-5D320-32-09	32	165	188	57	245						
CMS-5D325-32-09	32.5	167.5	190.5	57	247.5				SPMG09	M3.5*8	
CMS-5D330-32-09	33	170	193	57	250						
CMS-5D335-32-09	33.5	172.5	195.5	57	252.5	39					
CMS-5D340-32-11	34	175	198	57	255						
CMS-5D345-32-11	34.5	177.5	200.5	57	257.5						
CMS-5D350-32-11	35	180	203	57	260						
CMS-5D355-32-11	35.5	182.5	205.5	57	262.5		32	M22*2.0			
CMS-5D360-32-11	36	185	208	57	265						
CMS-5D365-32-11	36.5	187.5	210.5	57	267.5						T15
CMS-5D370-32-11	37	190	213	57	270						
CMS-5D375-32-11	37.5	192.5	215.5	57	272.5						
CMS-5D380-32-11	38	195	218	57	275	44			SPMG11	M4.0*10	
CMS-5D385-32-11	38.5	197.5	220.5	57	277.5						
CMS-5D390-32-11	39	200	223	57	280						
CMS-5D395-32-11	39.5	202.5	225.5	57	282.5						
CMS-5D400-40-11	40	205	228	62	290						
CMS-5D405-40-11	40.5	207.5	230.5	62	292.5						
CMS-5D410-40-11	41	210	233	62	295						
CMS-5D415-40-11	41.5	212.5	235.5	62	297.5						
CMS-5D420-40-14	42	215	238	62	300						
CMS-5D425-40-14	42.5	217.5	240.5	62	302.5						
CMS-5D430-40-14	43	220	243	62	305	49					
CMS-5D435-40-14	43.5	222.5	245.5	62	307.5						
CMS-5D440-40-14	44	225	248	62	310						
CMS-5D445-40-14	44.5	227.5	250.5	62	312.5						
CMS-5D450-40-14	45	230	253	62	315		40	-			
CMS-5D455-40-14	45.5	232.5	255.5	62	317.5						
CMS-5D460-40-14	46	235	258	62	320				SPMG14	M5.0*12	T20
CMS-5D465-40-14	46.5	237.5	260.5	62	322.5						
CMS-5D470-40-14	47	240	263	62	325						
CMS-5D475-40-14	47.5	242.5	265.5	62	327.5						
CMS-5D480-40-14	48	245	268	62	330	54					
CMS-5D485-40-14	48.5	247.5	270.5	62	332.5						
CMS-5D490-40-14	49	250	273	62	335						
CMS-5D495-40-14	49.5	252.5	275.5	62	337.5						
CMS-5D500-40-14	50	255	278	62	340						

단위: mm OAL = LPR + LS DCONMS: 샹크 직경 CNT: - 는 나사산 없음

CMS-5D 사양 2/2 DC 31.5-50 mm

SPMG 적용 인서트 일람표

CMS 시리즈 2D / 3D / 4D / 5D

인서트 적용 범위는 아래 표를 참조하십시오. 스크루와 렌치는 CMS 사양을 따릅니다.

SPMG

CMS 적용 인서트

직경 범위 12.5-50 mm

인서트 규격 6종

오른쪽은 인서트 실물 사진입니다.



인서트 형번	드릴 직경 DC (mm)	스크루	렌치	깊이 (L/D)
SPMG050204-DG	12.5-15	M2.0*5	T6	2D-5D
SPMG060204-DG	15.5-21.5	M2.2*5	T7	2D-5D
SPMG07T308-DG	22-27.5	M2.5*6	T8	2D-5D
SPMG090408-DG	28-33.5	M3.5*8	T15	2D-5D
SPMG110408-DG	34-41.5	M4.0*10	T15	2D-5D
SPMG140512-DG	42-50	M5.0*12	T20	2D-5D

인서트 재종 및 피삭재

다양한 피삭재에 적합한 인서트 재종을 제공합니다.

인서트 재종	피삭재	분류
CTC9025	강/범용	P/G
CTC7030	스테인리스강	M
CTC6015	주철	K
CTC3020	알루미늄·구리	N

SPMG와 알루미늄 가공용 SPGG는 서로 다른 인서트 시리즈입니다.

생크 직경, 연결부 및 치수는 해당 사양 페이지를 참조하십시오. CNT의 - 는 나사산 없음을 뜻합니다.

단위: mm 인서트 사진은 실물 예시이며, 규격은 적용 표를 참조하십시오.

TWCD

팁만 교체하는
크라운 드릴

크라운 드릴 시리즈

EXCHANGEABLE TIP DRILLS



가공 깊이
1.5D / 3D / 4D / 5D / 6D / 8D

직경 범위
10.0–30.8 mm

드릴 팁
AABZ / AAZ / ACB

팁 교환식 드릴 · 드릴 바디



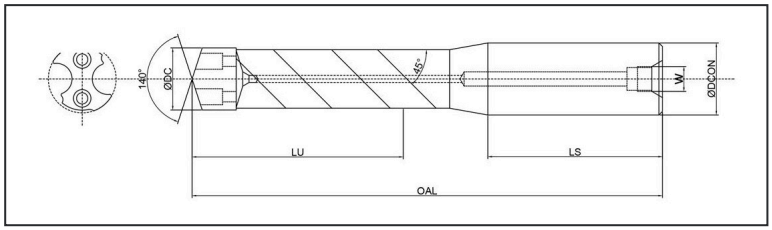

가공 깊이: 1.5D / 3D / 4D / 5D / 6D / 8D

직경 10.0–13.4 mm / 1 / 4

DC 직경 범위	L/D 깊이	형번	LU 유효 길이	LS 생크 길이	OAL 전장	DCON 생크 직경	W 생크 나사	스크루	렌치
10.0-10.5	1.5D	TWCD-100-105-1.5D-12S0	21	48	81	12	M6	M2.0*7.5	T6
	3D	TWCD-100-105-3.0D-12S0	37	48	97				
	4D	TWCD-100-105-4.0D-12S0	47	48	107				
	5D	TWCD-100-105-5.0D-12S0	58	48	118				
	6D	TWCD-100-105-6.0D-12S0	68	48	128				
	8D	TWCD-100-105-8.0D-12S0	89	48	149				
10.6-11.2	1.5D	TWCD-106-112-1.5D-12S0	22	48	83	12	M6		
	3D	TWCD-106-112-3.0D-12S0	39	48	100				
	4D	TWCD-106-112-4.0D-12S0	50	48	111				
	5D	TWCD-106-112-5.0D-12S0	62	48	122				
	6D	TWCD-106-112-6.0D-12S0	73	48	135				
	8D	TWCD-106-112-8.0D-12S0	95	48	156				
11.3-11.9	1.5D	TWCD-113-119-1.5D-12S0	24	48	85	12	M6		
	3D	TWCD-113-119-3.0D-12S0	42	48	103				
	4D	TWCD-113-119-4.0D-12S0	53	48	114				
	5D	TWCD-113-119-5.0D-12S0	65	48	127				
	6D	TWCD-113-119-6.0D-12S0	77	48	138				
	8D	TWCD-113-119-8.0D-12S0	101	48	162				
12.0-12.4	1.5D	TWCD-120-124-1.5D-16S0	25	48	87	16	ZG1/8	M2.2*8.5	T8
	3D	TWCD-120-124-3.0D-16S0	43	48	105				
	4D	TWCD-120-124-4.0D-16S0	56	48	118				
	5D	TWCD-120-124-5.0D-16S0	68	48	130				
	6D	TWCD-120-124-6.0D-16S0	81	48	143				
	8D	TWCD-120-124-8.0D-16S0	105	48	167				
12.5-12.9	1.5D	TWCD-125-129-1.5D-16S0	26	48	88	16	ZG1/8		
	3D	TWCD-125-129-3.0D-16S0	45	48	107				
	4D	TWCD-125-129-4.0D-16S0	58	48	120				
	5D	TWCD-125-129-5.0D-16S0	71	48	133				
	6D	TWCD-125-129-6.0D-16S0	84	48	146				
	8D	TWCD-125-129-8.0D-16S0	110	48	172				
13.0-13.4	1.5D	TWCD-130-134-1.5D-16S0	27	48	90	16	ZG1/8		
	3D	TWCD-130-134-3.0D-16S0	47	48	110				
	4D	TWCD-130-134-4.0D-16S0	60	48	123				
	5D	TWCD-130-134-5.0D-16S0	74	48	137				
	6D	TWCD-130-134-6.0D-16S0	87	48	150				
	8D	TWCD-130-134-8.0D-16S0	114	48	177				

단위: mm LU: 유효 길이 LS: 생크 길이 OAL: 전장 DCON: 생크 직경 W: 생크 나사

TWCD 드릴 바디 1/4 다음 페이지: 직경 13.5 mm~

팁 교환식 드릴 · 드릴 바디



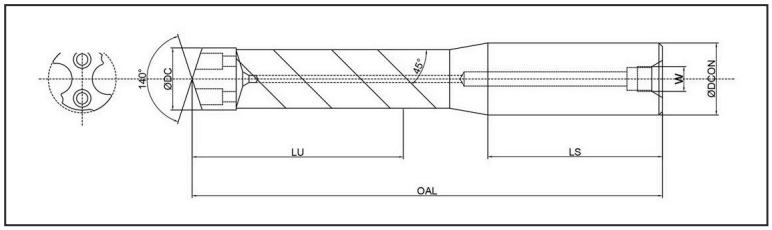

가공 깊이: 1.5D / 3D / 4D / 5D / 6D / 8D

직경 13.5–19.5 mm / 2 / 4

DC 직경 범위	L/D 깊이	형번	LU 유효 길이	LS 생크 길이	OAL 전장	DCON 생크 직경	W 생크 나사	스크루	렌치
13.5-14.5	1.5D	TWCD-135-145-1.5D-16S0	29	48	93	16	ZG1/8	M2.2*8.5	T8
	3D	TWCD-135-145-3.0D-16S0	51	48	114				
	4D	TWCD-135-145-4.0D-16S0	65	48	128				
	5D	TWCD-135-145-5.0D-16S0	80	48	143				
	6D	TWCD-135-145-6.0D-16S0	94	48	157				
	8D	TWCD-135-145-8.0D-16S0	123	48	186				
14.6-15.5	1.5D	TWCD-146-155-1.5D-16S0	31	48	98	16	ZG1/8		
	3D	TWCD-146-155-3.0D-16S0	54	48	121				
	4D	TWCD-146-155-4.0D-16S0	70	48	137				
	5D	TWCD-146-155-5.0D-16S0	85	48	152				
	6D	TWCD-146-155-6.0D-16S0	101	48	168				
	8D	TWCD-146-155-8.0D-16S0	132	48	199				
15.6-16.5	1.5D	TWCD-156-165-1.5D-16S0	33	48	101	16	ZG1/8		
	3D	TWCD-156-165-3.0D-16S0	58	48	126				
	4D	TWCD-156-165-4.0D-16S0	74	48	142				
	5D	TWCD-156-165-5.0D-16S0	91	48	159				
	6D	TWCD-156-165-6.0D-16S0	107	48	175				
	8D	TWCD-156-165-8.0D-16S0	140	48	208				
16.6-17.5	1.5D	TWCD-166-175-1.5D-20S0	35	50	106	20	ZG1/8	M2.5*9.5	T10
	3D	TWCD-166-175-3.0D-20S0	61	50	132				
	4D	TWCD-166-175-4.0D-20S0	79	50	150				
	5D	TWCD-166-175-5.0D-20S0	96	50	167				
	6D	TWCD-166-175-6.0D-20S0	114	50	185				
	8D	TWCD-166-175-8.0D-20S0	149	50	220				
17.6-18.5	1.5D	TWCD-176-185-1.5D-20S0	37	50	109	20	ZG1/8		
	3D	TWCD-176-185-3.0D-20S0	65	50	137				
	4D	TWCD-176-185-4.0D-20S0	83	50	155				
	5D	TWCD-176-185-5.0D-20S0	102	50	174				
	6D	TWCD-176-185-6.0D-20S0	120	50	192				
	8D	TWCD-176-185-8.0D-20S0	157	50	229				
18.6-19.5	1.5D	TWCD-186-195-1.5D-20S0	39	50	112	20	ZG1/8	M3.0*11	T15
	3D	TWCD-186-195-3.0D-20S0	68	50	142				
	4D	TWCD-186-195-4.0D-20S0	88	50	162				
	5D	TWCD-186-195-5.0D-20S0	107	50	181				
	6D	TWCD-186-195-6.0D-20S0	127	50	201				
	8D	TWCD-186-195-8.0D-20S0	166	50	240				

단위: mm LU: 유효 길이 LS: 생크 길이 OAL: 전장 DCON: 생크 직경 W: 생크 나사

TWCD 드릴 바디 2/4 다음 페이지: 직경 19.6 mm~

팁 교환식 드릴 · 드릴 바디



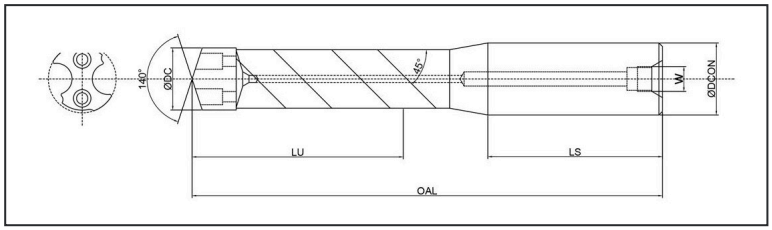

가공 깊이: 1.5D / 3D / 4D / 5D / 6D / 8D

직경 19.6–25.8 mm / 3 / 4

DC 직경 범위	L/D 깊이	형번	LU 유효 길이	LS 생크 길이	OAL 전장	DCON 생크 직경	W 생크 나사	스크루	렌치
19.6-20.5	1.5D	TWCD-196-205-1.5D-20S0	41	50	115	20	ZG1/8	M3.0*11	T15
	3D	TWCD-196-205-3.0D-20S0	72	50	146				
	4D	TWCD-196-205-4.0D-20S0	92	50	166				
	5D	TWCD-196-205-5.0D-20S0	113	50	187				
	6D	TWCD-196-205-6.0D-20S0	127	50	207				
	8D	TWCD-196-205-8.0D-20S0	166	50	248				
20.6-21.5	1.5D	TWCD-206-215-1.5D-25S0	43	60	129	25	ZG1/8		
	3D	TWCD-206-215-3.0D-25S0	75	60	161				
	4D	TWCD-206-215-4.0D-25S0	97	60	183				
	5D	TWCD-206-215-5.0D-25S0	118	60	204				
	6D	TWCD-206-215-6.0D-25S0	140	60	226				
	8D	TWCD-206-215-8.0D-25S0	183	60	269				
21.6-22.8	1.5D	TWCD-216-228-1.5D-25S0	46	60	132	25	ZG1/8	M3.5*11.5	
	3D	TWCD-216-228-3.0D-25S0	80	60	166				
	4D	TWCD-216-228-4.0D-25S0	103	60	189				
	5D	TWCD-216-228-5.0D-25S0	125	60	212				
	6D	TWCD-216-228-6.0D-25S0	148	60	234				
	8D	TWCD-216-228-8.0D-25S0	194	60	280				
22.9-23.8	1.5D	TWCD-229-238-1.5D-25S0	48	60	135	25	ZG1/8		
	3D	TWCD-229-238-3.0D-25S0	83	60	171				
	4D	TWCD-229-238-4.0D-25S0	107	60	194				
	5D	TWCD-229-238-5.0D-25S0	131	60	218				
	6D	TWCD-229-238-6.0D-25S0	155	60	242				
	8D	TWCD-229-238-8.0D-25S0	202	60	289				
23.9-24.8	1.5D	TWCD-239-248-1.5D-25S0	50	60	138	25	ZG1/8		
	3D	TWCD-239-248-3.0D-25S0	87	60	175				
	4D	TWCD-239-248-4.0D-25S0	112	60	200				
	5D	TWCD-239-248-5.0D-25S0	136	60	224				
	6D	TWCD-239-248-6.0D-25S0	161	60	249				
	8D	TWCD-239-248-8.0D-25S0	211	60	299				
24.9-25.8	1.5D	TWCD-249-258-1.5D-25S0	52	60	141	25	ZG1/8	M4.0*14	T20
	3D	TWCD-249-258-3.0D-25S0	90	60	179				
	4D	TWCD-249-258-4.0D-25S0	116	60	205				
	5D	TWCD-249-258-5.0D-25S0	142	60	231				
	6D	TWCD-249-258-6.0D-25S0	168	60	257				
	8D	TWCD-249-258-8.0D-25S0	219	60	308				

단위: mm LU: 유효 길이 LS: 생크 길이 OAL: 전장 DCON: 생크 직경 W: 생크 나사

TWCD 드릴 바디 3/4 다음 페이지: 직경 25.9 mm~

팁 교환식 드릴 · 드릴 바디



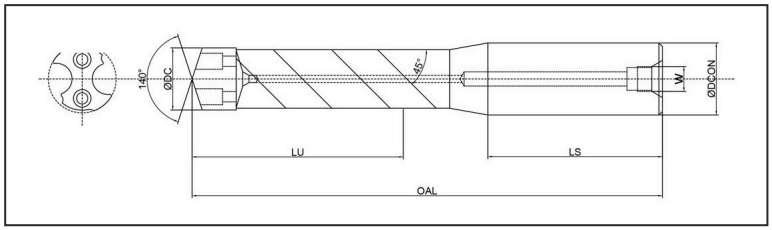

가공 깊이: 1.5D / 3D / 4D / 5D / 6D / 8D

직경 25.9–30.8 mm / 4 / 4

DC 직경 범위	L/D 깊이	형번	LU 유효 길이	LS 생크 길이	OAL 전장	DCON 생크 직경	W 생크 나사	스크루	렌치
25.9-26.8	1.5D	TWCD-259-268-1.5D-32S0	54	60	143	32	ZG1/8	M4.0*14	T20
	3D	TWCD-259-268-3.0D-32S0	94	60	183				
	4D	TWCD-259-268-4.0D-32S0	121	60	210				
	5D	TWCD-259-268-5.0D-32S0	147	60	237				
	6D	TWCD-259-268-6.0D-32S0	174	60	263				
	8D	TWCD-259-268-8.0D-32S0	228	60	317				
26.9-27.8	1.5D	TWCD-269-278-1.5D-32S0	56	60	146	32	ZG1/8		
	3D	TWCD-269-278-3.0D-32S0	97	60	188				
	4D	TWCD-269-278-4.0D-32S0	125	60	216				
	5D	TWCD-269-278-5.0D-32S0	153	60	244				
	6D	TWCD-269-278-6.0D-32S0	181	60	272				
	8D	TWCD-269-278-8.0D-32S0	236	60	327				
27.9-28.8	1.5D	TWCD-279-288-1.5D-32S0	58	60	149	32	ZG1/8		
	3D	TWCD-279-288-3.0D-32S0	101	60	193				
	4D	TWCD-279-288-4.0D-32S0	130	60	222				
	5D	TWCD-279-288-5.0D-32S0	158	60	250				
	6D	TWCD-279-288-6.0D-32S0	187	60	279				
	8D	TWCD-279-288-8.0D-32S0	245	60	337				
28.9-29.8	1.5D	TWCD-289-298-1.5D-32S0	60	60	153	32	ZG1/8	M4.5*15	T25
	3D	TWCD-289-298-3.0D-32S0	104	60	197				
	4D	TWCD-289-298-4.0D-32S0	134	60	227				
	5D	TWCD-289-298-5.0D-32S0	164	60	257				
	6D	TWCD-289-298-6.0D-32S0	194	60	287				
	8D	TWCD-289-298-8.0D-32S0	253	60	346				
29.9-30.8	1.5D	TWCD-299-308-1.5D-32S0	62	60	156	32	ZG1/8		
	3D	TWCD-299-308-3.0D-32S0	108	60	202				
	4D	TWCD-299-308-4.0D-32S0	139	60	233				
	5D	TWCD-299-308-5.0D-32S0	169	60	263				
	6D	TWCD-299-308-6.0D-32S0	200	60	294				
	8D	TWCD-299-308-8.0D-32S0	262	60	356				

단위: mm LU: 유효 길이 LS: 생크 길이 OAL: 전장 DCON: 생크 직경 W: 생크 나사
TWCD 드릴 바디 4/4

AABZ

크라운 드릴 팁 AABZ

교환식 드릴 팁



등급
AABZ-TC5230

적용 드릴 바디
TWCD 시리즈

직경 범위
10.0–30.8 mm

피삭재 경도
HRC 25–50 (강)

등급	DC 직경 범위 (mm)	F 이송 (mm/rev)	Vc 절삭 속도 (m/min)
AABZ-TC5230	10.0–10.5	0.12–0.18	
AABZ-TC5230	10.6–11.2	0.12–0.18	
AABZ-TC5230	11.3–11.9	0.12–0.18	
AABZ-TC5230	12.0–12.4	0.12–0.18	
AABZ-TC5230	12.5–12.9	0.14–0.20	
AABZ-TC5230	13.0–13.4	0.14–0.20	
AABZ-TC5230	13.5–14.5	0.14–0.20	
AABZ-TC5230	14.6–15.5	0.16–0.22	
AABZ-TC5230	15.6–16.5	0.16–0.22	
AABZ-TC5230	16.6–17.5	0.16–0.22	
AABZ-TC5230	17.6–18.5	0.16–0.22	HRC 25–32: 70–90 HRC 32–40: 60–70 HRC 42–50: 50–60
AABZ-TC5230	18.6–19.5	0.16–0.22	
AABZ-TC5230	19.6–20.5	0.16–0.22	
AABZ-TC5230	20.6–21.5	0.16–0.22	
AABZ-TC5230	21.6–22.8	0.16–0.22	
AABZ-TC5230	22.9–23.8	0.16–0.22	
AABZ-TC5230	23.9–24.8	0.16–0.22	
AABZ-TC5230	24.9–25.8	0.16–0.22	
AABZ-TC5230	25.9–26.8	0.16–0.25	
AABZ-TC5230	26.9–27.8	0.16–0.25	
AABZ-TC5230	27.9–28.8	0.16–0.25	
AABZ-TC5230	28.9–29.8	0.16–0.25	
AABZ-TC5230	29.9–30.8	0.16–0.25	

F: 회전당 이송 Vc: 절삭 속도
셀프 센터링 팁: 5D · 8D · 10D · 12D 에 적용

교환식 드릴 팁



등급
AAZ-TC3825

적용 드릴 바디
TWCD 시리즈

직경 범위
10.0–30.8 mm

피삭재 경도
HRC 25–50 (강)

등급	DC 직경 범위 (mm)	F 이송 (mm/rev)	Vc 절삭 속도 (m/min)
AAZ-TC3825	10.0–10.5	0.12–0.18	
AAZ-TC3825	10.6–11.2	0.12–0.18	
AAZ-TC3825	11.3–11.9	0.12–0.18	
AAZ-TC3825	12.0–12.4	0.12–0.18	
AAZ-TC3825	12.5–12.9	0.14–0.2	
AAZ-TC3825	13.0–13.4	0.14–0.2	
AAZ-TC3825	13.5–14.5	0.14–0.2	
AAZ-TC3825	14.6–15.5	0.16–0.22	
AAZ-TC3825	15.6–16.5	0.16–0.22	
AAZ-TC3825	16.6–17.5	0.16–0.22	
AAZ-TC3825	17.6–18.5	0.16–0.22	HRC 25–32: 70–90 HRC 32–42: 60–70 HRC 42–50: 50–60
AAZ-TC3825	18.6–19.5	0.16–0.22	
AAZ-TC3825	19.6–20.5	0.16–0.22	
AAZ-TC3825	20.6–21.5	0.16–0.22	
AAZ-TC3825	21.6–22.8	0.16–0.22	
AAZ-TC3825	22.9–23.8	0.16–0.22	
AAZ-TC3825	23.9–24.8	0.16–0.22	
AAZ-TC3825	24.9–25.8	0.16–0.25	
AAZ-TC3825	25.9–26.8	0.16–0.25	
AAZ-TC3825	26.9–27.8	0.16–0.25	
AAZ-TC3825	27.9–28.8	0.16–0.25	
AAZ-TC3825	28.9–29.8	0.16–0.25	
AAZ-TC3825	29.9–30.8	0.16–0.25	

F: 회전당 이송 Vc: 절삭 속도

교환식 드릴 팁



등급
ACB-TC5230

적용 드릴 바디
TWCD 시리즈

직경 범위
10.0–30.8 mm

피삭재 경도
HRC 25 이하
연질재 · 스테인리스강

절삭 조건 ① 연질재

등급	DC 직경 범위 (mm)	F 이송 (mm/rev)	Vc 절삭 속도 (m/min)
ACB-TC5230	10.0–10.5	0.14–0.2	70–100 (연질재)
ACB-TC5230	10.6–11.2	0.14–0.2	
ACB-TC5230	11.3–11.9	0.14–0.2	
ACB-TC5230	12.0–12.4	0.14–0.2	
ACB-TC5230	12.5–12.9	0.16–0.22	
ACB-TC5230	13.0–13.4	0.16–0.22	
ACB-TC5230	13.5–14.5	0.16–0.22	
ACB-TC5230	14.6–15.5	0.18–0.24	
ACB-TC5230	15.6–16.5	0.18–0.24	
ACB-TC5230	16.6–17.5	0.2–0.26	
ACB-TC5230	17.6–18.5	0.2–0.26	
ACB-TC5230	18.6–19.5	0.2–0.26	
ACB-TC5230	19.6–20.5	0.2–0.26	
ACB-TC5230	20.6–21.5	0.2–0.26	
ACB-TC5230	21.6–22.8	0.2–0.26	
ACB-TC5230	22.9–23.8	0.2–0.26	
ACB-TC5230	23.9–24.8	0.2–0.26	
ACB-TC5230	24.9–25.8	0.2–0.26	
ACB-TC5230	25.9–26.8	0.2–0.26	
ACB-TC5230	26.9–27.8	0.2–0.26	
ACB-TC5230	27.9–28.8	0.2–0.26	
ACB-TC5230	28.9–29.8	0.2–0.26	
ACB-TC5230	29.9–30.8	0.2–0.26	

절삭 조건 ② 스테인리스강

등급	DC 직경 범위 (mm)	F 이송 (mm/rev)	Vc 절삭 속도 (m/min)
ACB-TC5230	10.0–10.5	0.1–0.14	50–70 (스테인리스강)
ACB-TC5230	10.6–11.2	0.1–0.14	
ACB-TC5230	11.3–11.9	0.1–0.14	
ACB-TC5230	12.0–12.4	0.1–0.14	
ACB-TC5230	12.5–12.9	0.12–0.16	
ACB-TC5230	13.0–13.4	0.12–0.16	
ACB-TC5230	13.5–14.5	0.12–0.16	
ACB-TC5230	14.6–15.5	0.14–0.18	
ACB-TC5230	15.6–16.5	0.14–0.18	
ACB-TC5230	16.6–17.5	0.16–0.2	
ACB-TC5230	17.6–18.5	0.16–0.2	
ACB-TC5230	18.6–19.5	0.16–0.2	
ACB-TC5230	19.6–20.5	0.16–0.2	
ACB-TC5230	20.6–21.5	0.16–0.2	
ACB-TC5230	21.6–22.8	0.16–0.2	
ACB-TC5230	22.9–23.8	0.16–0.2	
ACB-TC5230	23.9–24.8	0.16–0.2	
ACB-TC5230	24.9–25.8	0.16–0.2	
ACB-TC5230	25.9–26.8	0.16–0.2	
ACB-TC5230	26.9–27.8	0.16–0.2	
ACB-TC5230	27.9–28.8	0.16–0.2	
ACB-TC5230	28.9–29.8	0.16–0.2	
ACB-TC5230	29.9–30.8	0.16–0.2	

F: 회전당 이송 Vc: 절삭 속도